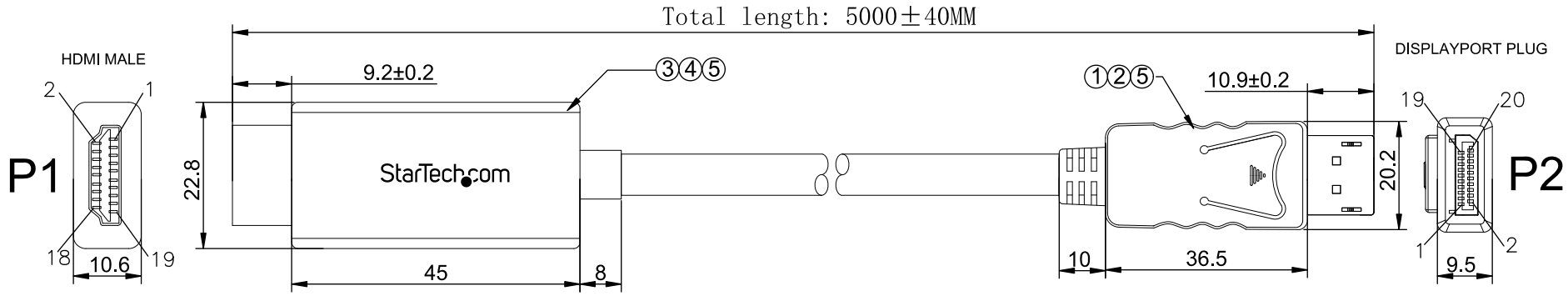

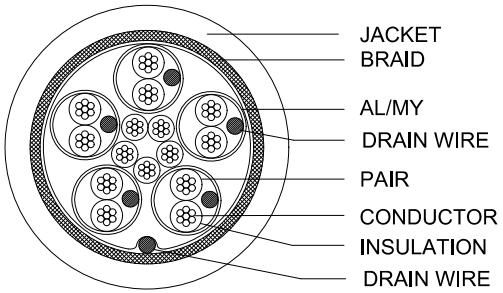

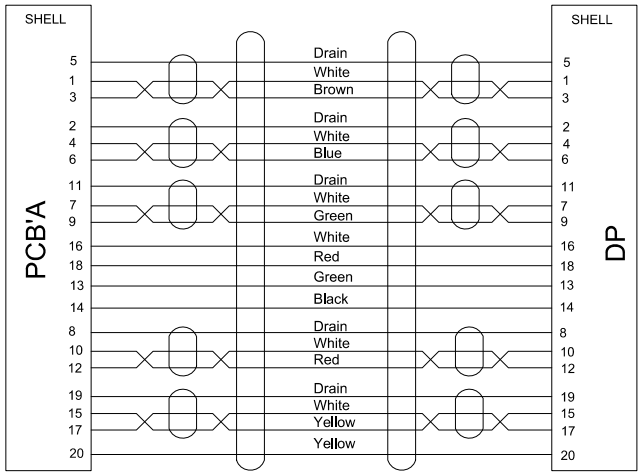

NO	DESCRIPTION
5	60P Black PVC
4	LDPE (RoHs)-PE101
3	HDMI A/M Black Front Cover
	HDMI A/M Black Case ,printing:StarTech.com
	Chip/Black
	PCBA\DP TO HDMI A\M\IC:PS8402\Nickel-plated connector
2	DP(Male) Black,top shell
	DP(Male) Black,bottom shell
1	DP(Housing) to DP(Housing)Cable(Nickel-plated connector) UL20276(7/0.1Tx1P+D+AL+MYLAR)x5P+7/0.1Tx5C+F+ADB16/5/0.12(AL),JACKET PVC BLACK. OD=6.0mm

THIRD ANGLE PROJECTION

GENERAL NOTES

DIMENSIONS ARE IN MM - DO NOT SCALE

THIS DOCUMENT CONTAINS CONFIDENTIAL, PROPRIETARY INFORMATION THAT IS PROPERTY OF STARTECH.COM

StarTech.com

PRODUCT ID	DP2HDMM5MB
DESCRIPTION	16ft (5m) DisplayPort 1.2 to HDMI Adapter Cable - 4K 30Hz

DO NOT SCALE | SHEET: 1 OF: 1 | UPLOAD DATE: 6/21/2023