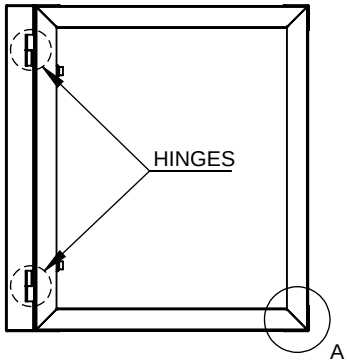

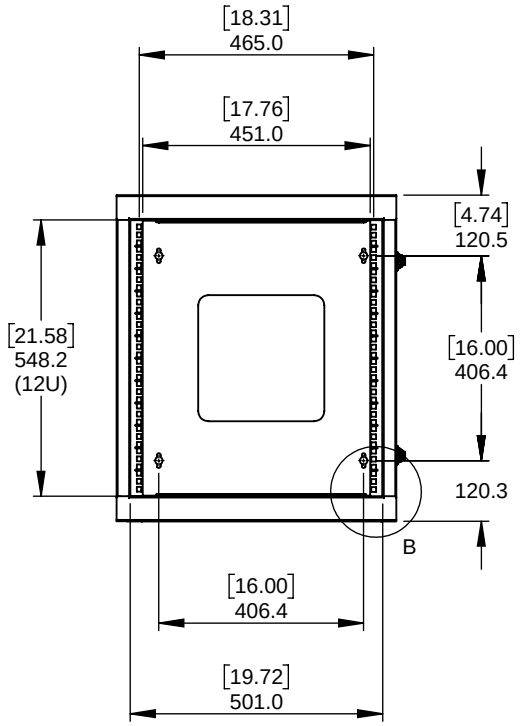

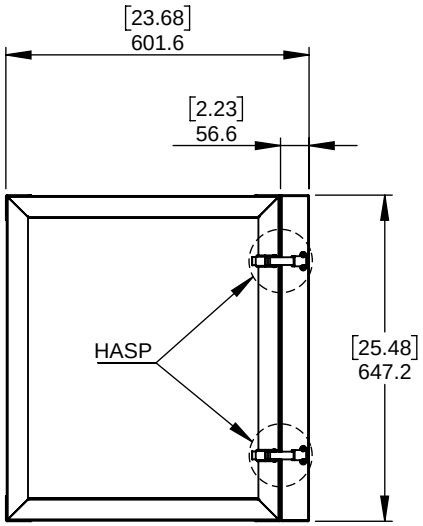

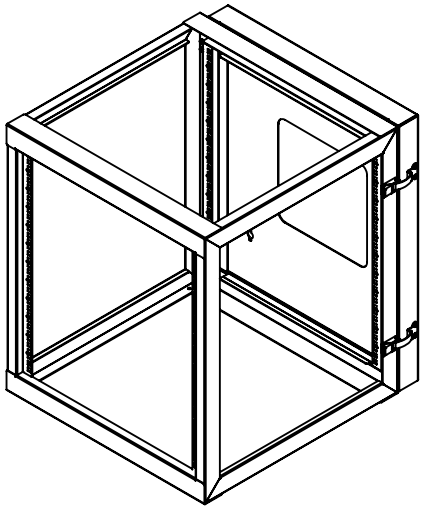

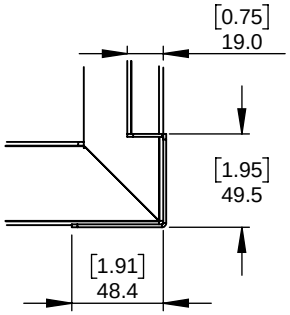

DETAIL A
SCALE 1 : 4

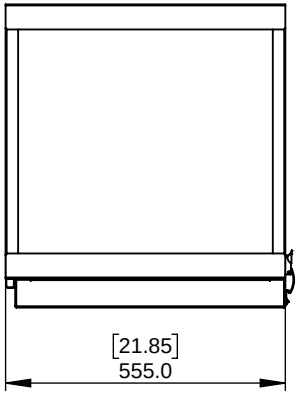

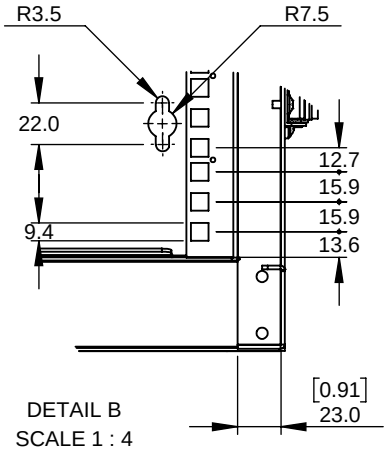

DETAIL B
SCALE 1 : 4

THIRD ANGLE PROJECTION

GENERAL NOTES

DIMENSIONS ARE IN MM - DO NOT SCALE

THIS DOCUMENT CONTAINS CONFIDENTIAL, PROPRIETARY INFORMATION THAT IS PROPERTY OF STARTECH.COM

StarTech.com

PRODUCT ID	RK1219WALLOH
DESCRIPTION	12U Hinged Open Frame Wall-Mount Server Rack - 22 in. Deep

REV: A	**DO NOT SCALE**	SHEET : **1** OF: **1**	**DATE: 5/15/2020**