8U Open Frame Wall Mount Equipment Rack - 12in Deep
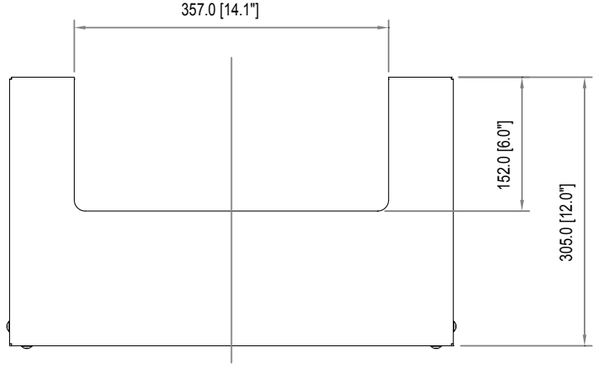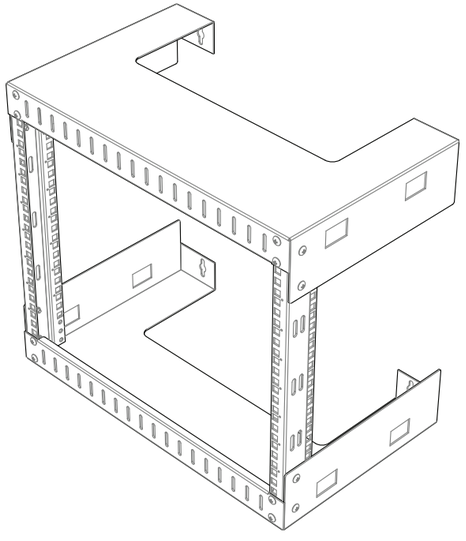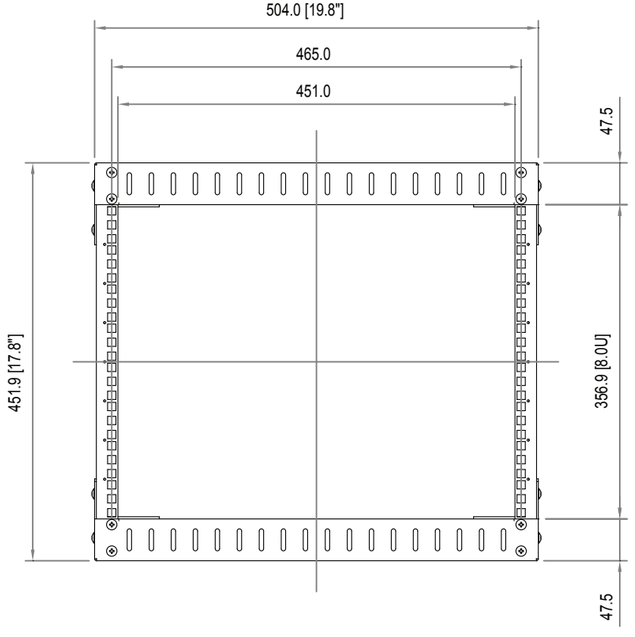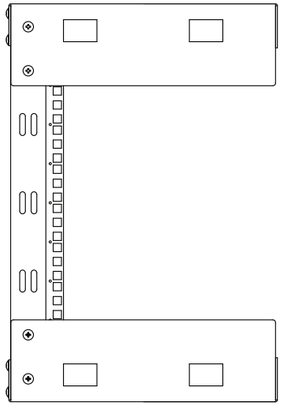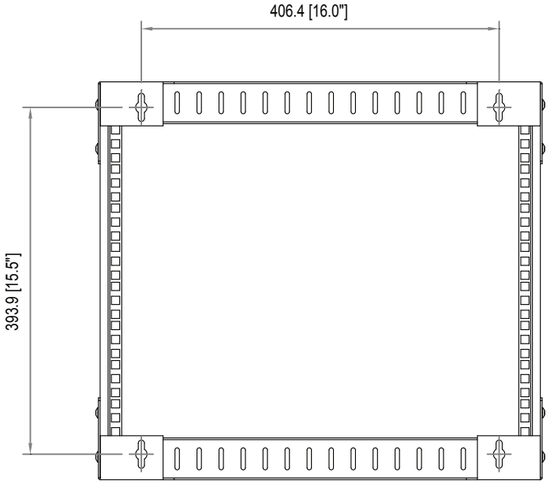
RK812WALLO