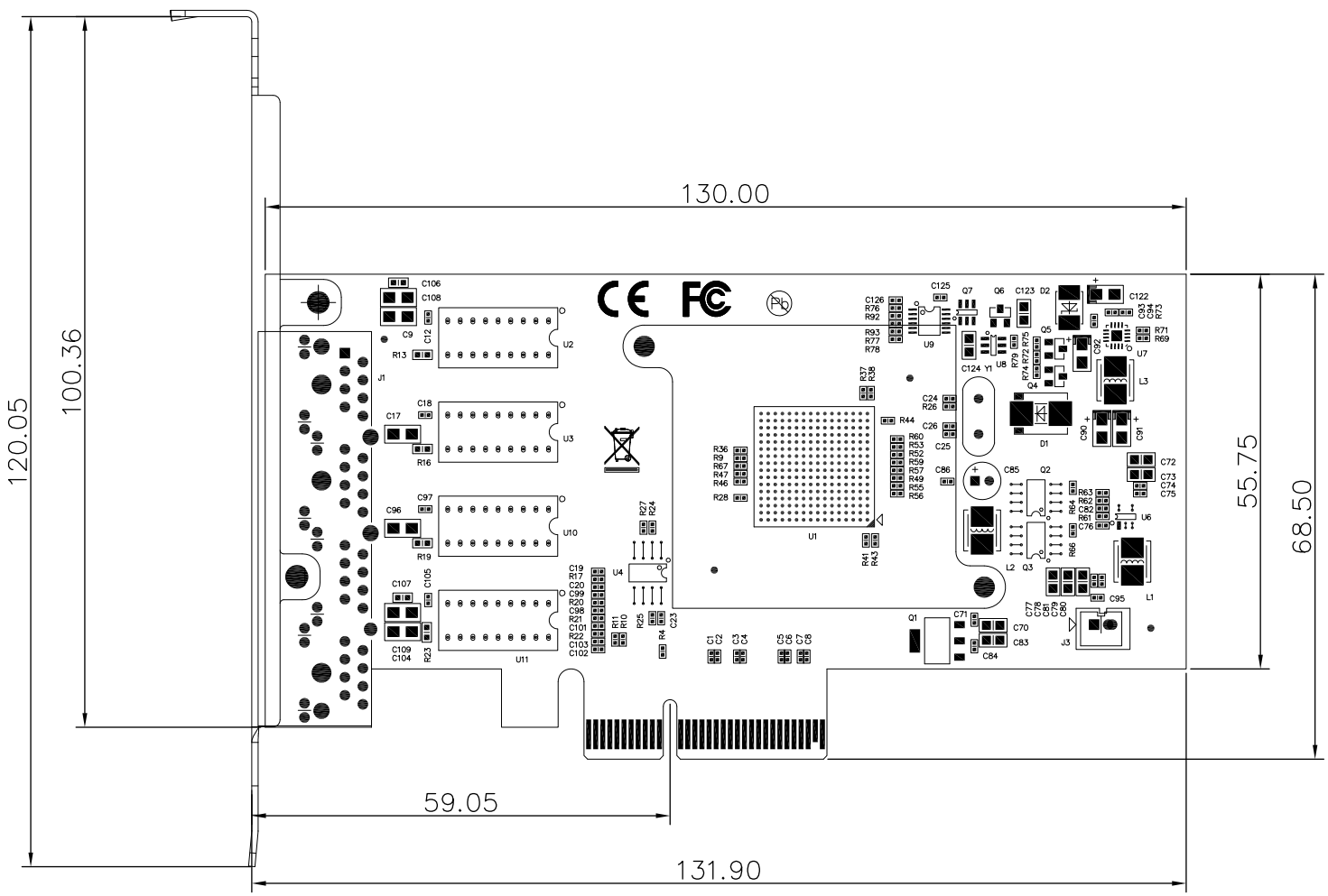

THIRD ANGLE PROJECTION

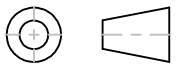

GENERAL NOTES

DIMENSIONS ARE IN MM - DO NOT SCALE

THIS DOCUMENT CONTAINS CONFIDENTIAL, PROPRIETARY INFORMATION THAT IS PROPERTY OF STARTECH.COM

StarTech.com

PRODUCT ID	ST4000SPEXI (standard bracket)
DESCRIPTION	4-Port Gigabit Ethernet Network Card - PCI Express, Intel I350 NIC

DO NOT SCALE	**SHEET: 1 OF: 2**	**UPLOAD DATE: 3/29/2021**

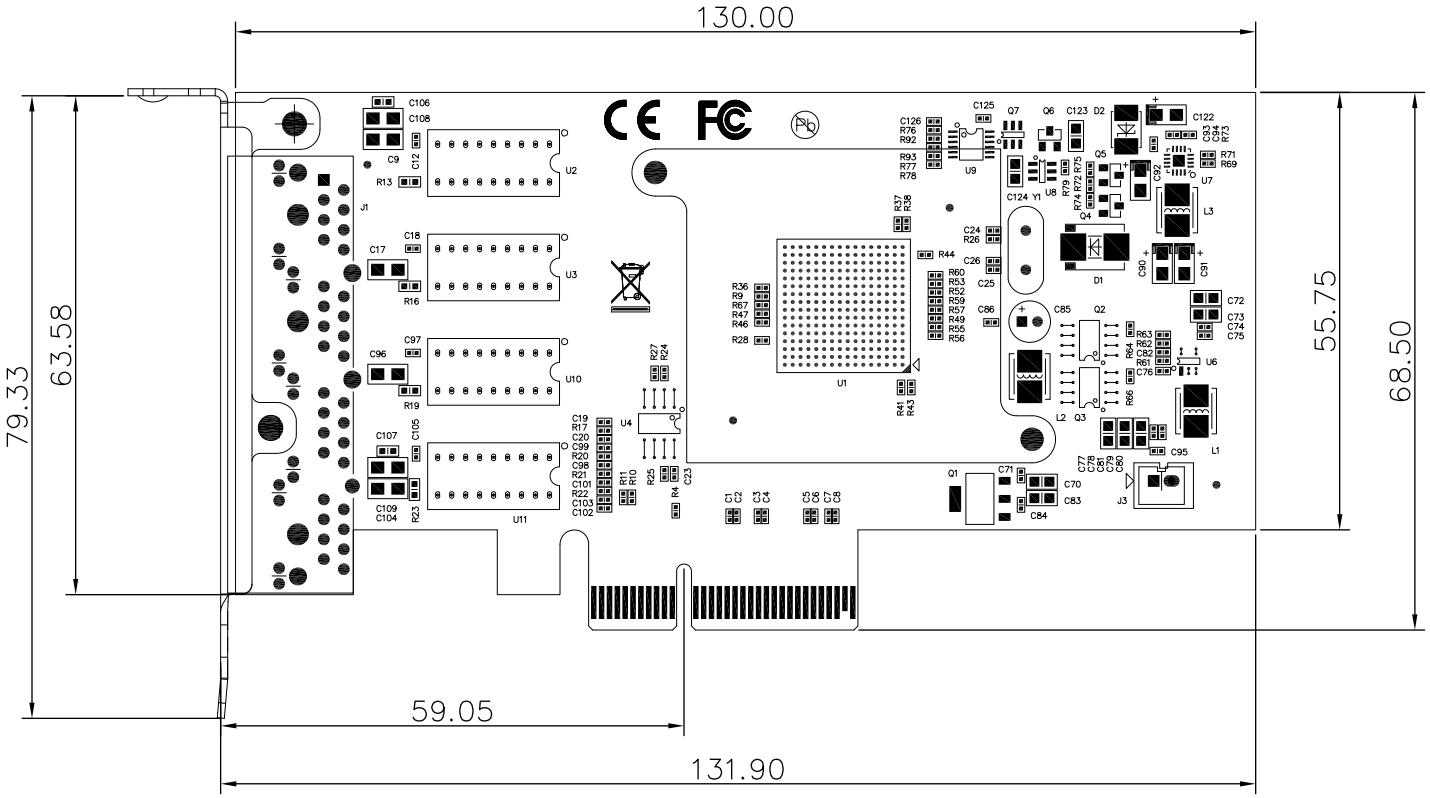

THIRD ANGLE PROJECTION

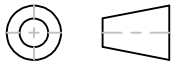

GENERAL NOTES

DIMENSIONS ARE IN MM - DO NOT SCALE

THIS DOCUMENT CONTAINS CONFIDENTIAL, PROPRIETARY INFORMATION THAT IS PROPERTY OF STARTECH.COM

StarTech.com

PRODUCT ID	ST4000SPEXI (low profile bracket)
DESCRIPTION	4-Port Gigabit Ethernet Network Card - PCI Express, Intel I350 NIC

DO NOT SCALE	**SHEET: 2 OF: 2**	**UPLOAD DATE: 3/29/2021**